Full Depth Reclamation with Cement

KRM014

September 24, 2015

REUSE YOUR ROADWAY

Road Rehabilitation Technology

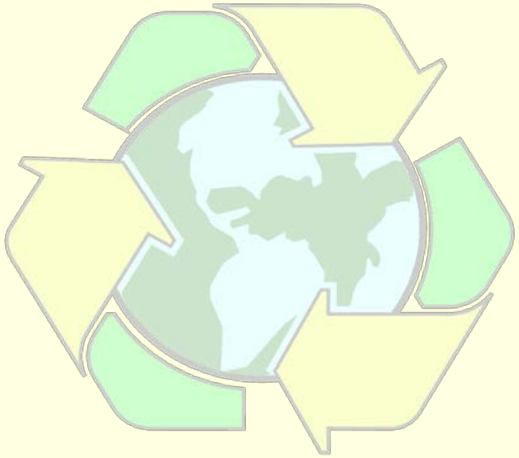

FDR with Cement

James W. Render Jr.
Business Development
Essroc Cement

Today’s Goals

- Introduce a different method of Recycling Roadways to a new audience.
- Explain the FDR process so that everyone understands the mechanism of how it works.
- Show that it is economical, sustainable & viable for our local roads.

FDR with Cement

- **<u>Full Depth Reclamation Using Cement</u>** is a method of flexible pavement reconstruction that utilizes the existing asphalt, base, and subgrade material to produce a new stabilized base course.

Windmill Projects - Benton Co. Indiana

- County Road System
  - Built for Farm to Market
  - Light loads
- 200 fully loaded trucks per Windmill
- Road system failure
  - Job delays
  - RM truck breakdowns
  - Dozers on site to pull trucks in & out
  - Major dissatisfaction for residents

Before FDR Process

After FDR Process

Lessons Learned

- FDR / SCS Process was competitive with conventional road rebuilding process with stone.
- FDR / SCS Process held up under tremendous loading
- Gave the taxpaying farmers & residents access to their land during the construction sequence
- Why couldn’t you use this process on conventional county road systems?

Current Situation

- County / municipality road systems already in place
- Emphasis on maintenance / rehabilitation
- These roads are local, low-volume, either flexible pavements or unpaved (gravel)
- As asphalt prices continue to escalate the old tired solutions are becoming cost prohibitive

Refinery Yield (% of Crude Intake)

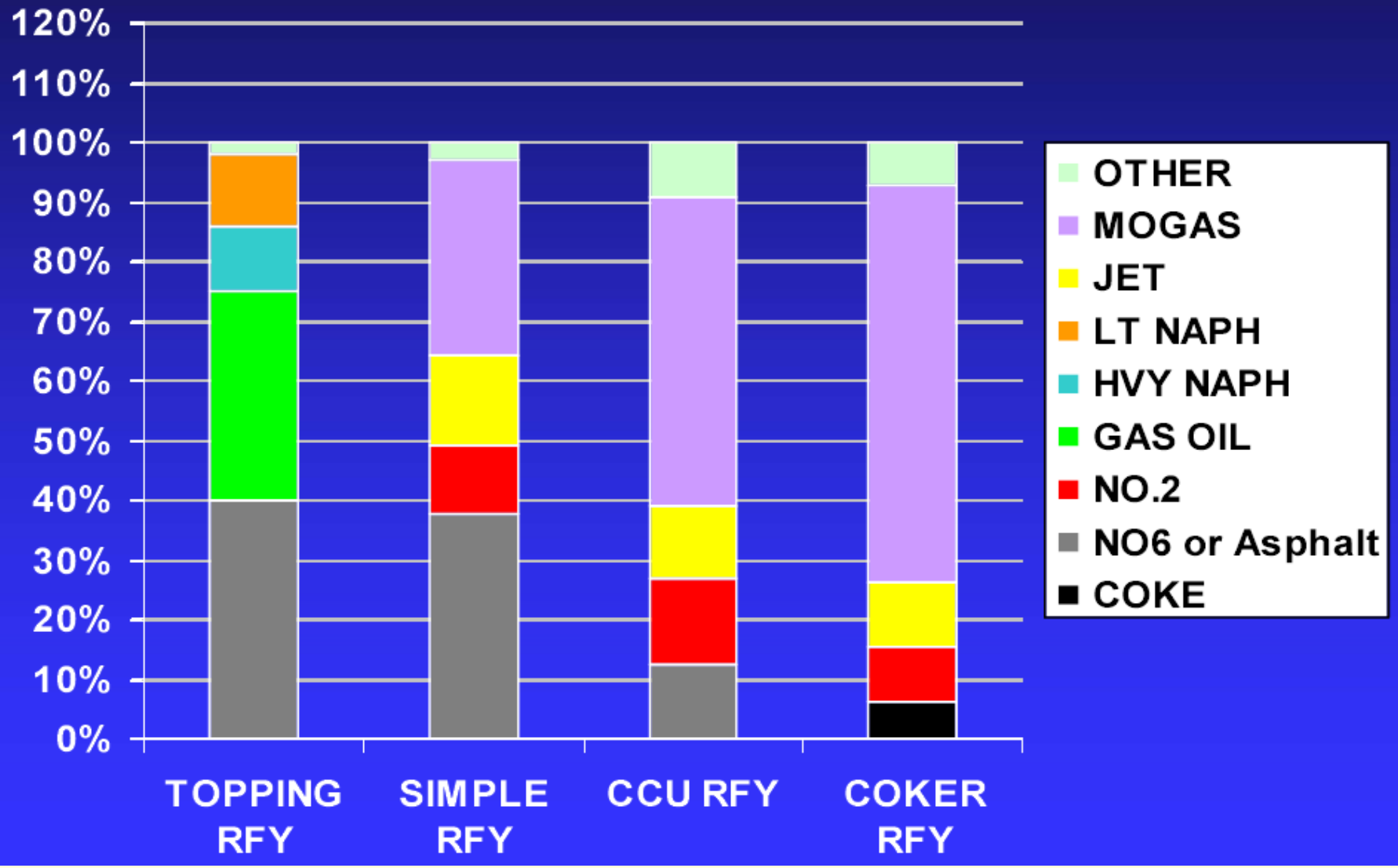

Source: Asphalt Supply in a Volatile Oil World – Bill Haverland ConocoPhillips Co.

Tight times put gravel on the road

High costs and tight budgets have prompted communities in Maine, Michigan, Indiana, Pennsylvania and Vermont to convert or consider converting their cracked asphalt roads back to gravel to cut maintenance costs, officials in those states say.

ALTERNATIVES???

- Fix the potholes & resurface with asphalt, again & again & again
- Reclamation with aggregate, again & again & again
- Dig it up & start again
  - Excavation
  - Fill with #2's
  - Add DGA
  - Chip Seal


Airflo

NEW ALTERNATIVE!

FIX IT RIGHT THE FIRST TIME !!!

- Full Depth Reclamation with cement
- Green solution – In place recycling
- Long term solution for short term money
- Surface of Asphalt or chip seal

Full Depth Reclamation

An Innovative Solution

for these

Tough Economic

Times

Reuse Your Roadway!

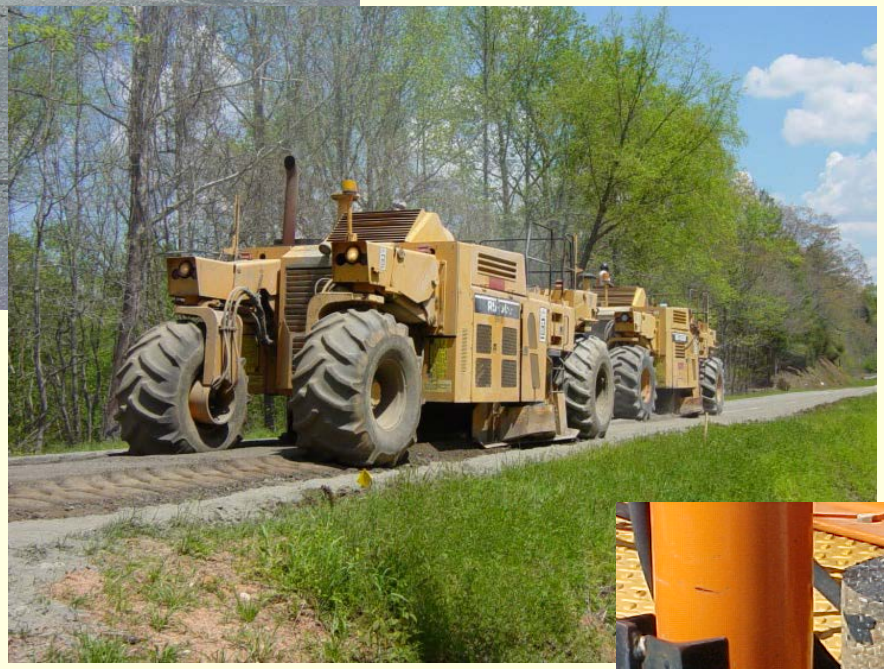

Create a Cement Stabilized Base to carry the loads

Three Worlds Coming Together

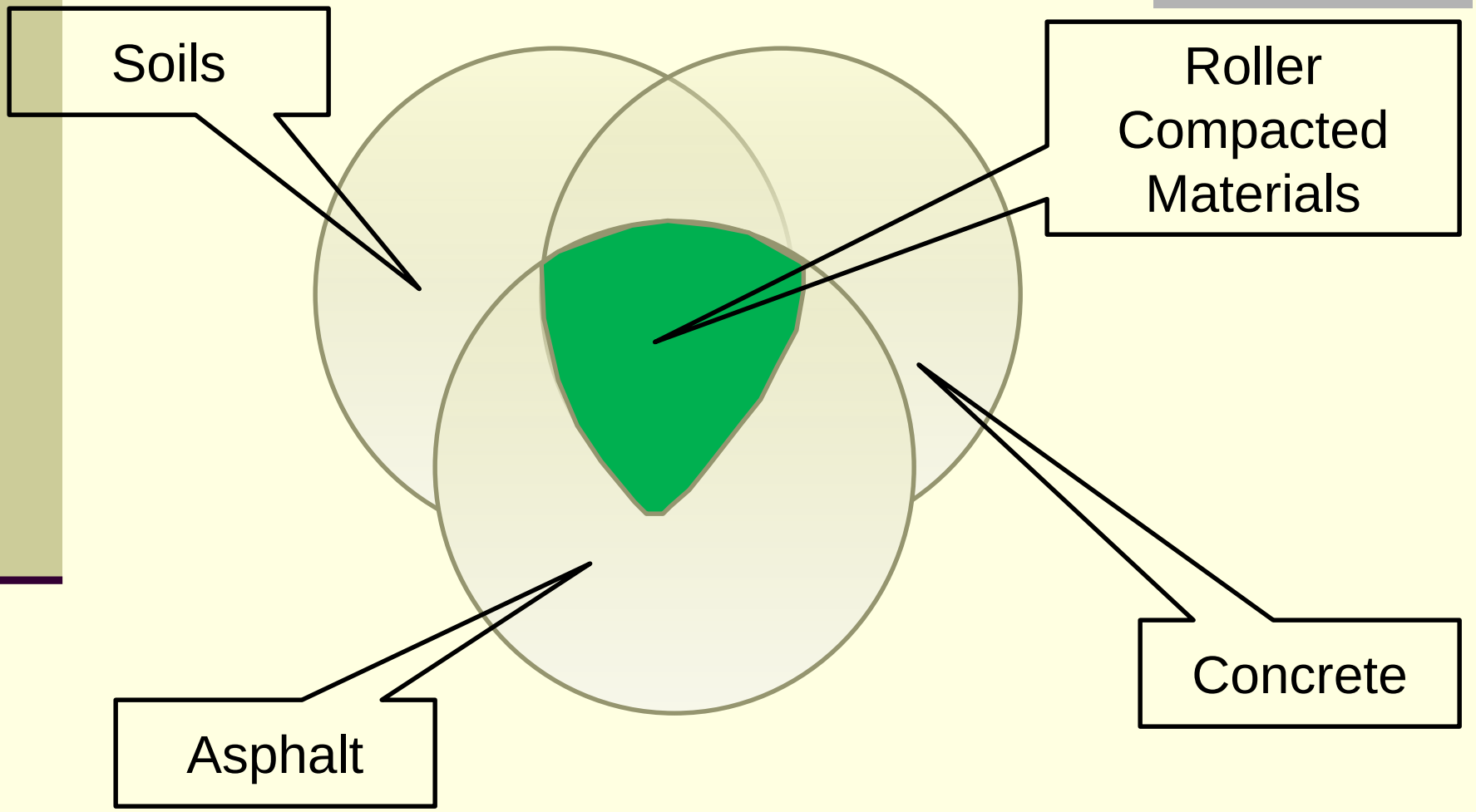

Why Portland Cement???

“Portland Cement is probably the closest thing we have to a universal stabilizer.”

From U.S. Army Corps of Engineers report “Chemical Stabilization Technology for Cold Weather”, Sept. 2002

Cement Stabilization History

- 80 years of successful pavements
- Diverse geographic areas (Texas, Florida, California, Montana, Michigan, Canada)
- Wide variety of soil types
  - Gravels
  - Sands
  - Silts
  - Clays
- Portland Cement gives significantly better strength than LKD – Lime Kiln Dust

Conventional FDR Construction Sequence

FDR Construction Sequence

- Spreading
- Pulverization
- Mixing
- Initial Compaction
- Grading
- Final Compaction
- Curing
- Surfacing

Bulk Transfer

Spreading Dry Cement


SPECIALTIES
SC4213
SC4213

Dry Mixing

Pulverization

Inside a Reclaimer

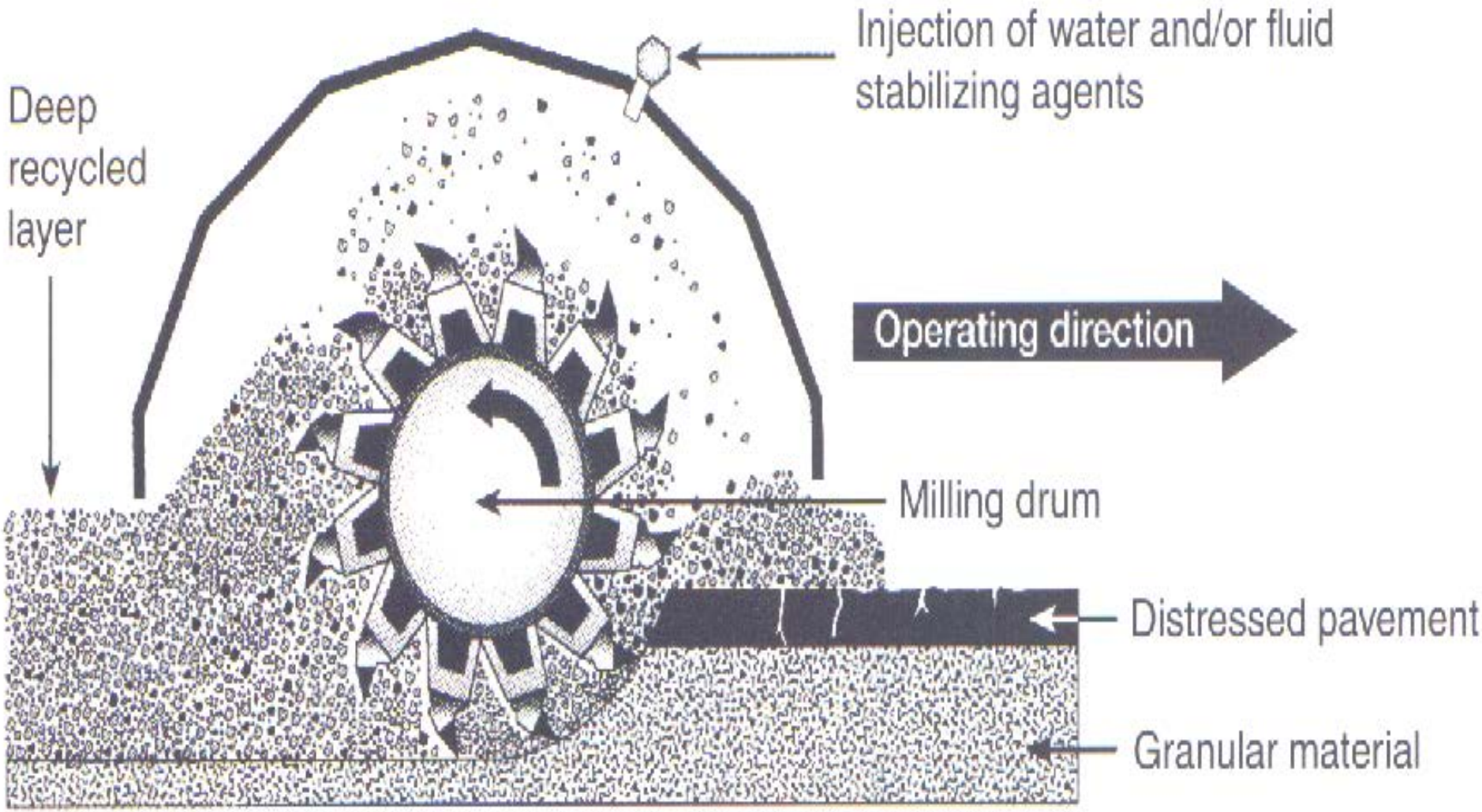

Gradation

Moisture/Density Relationship

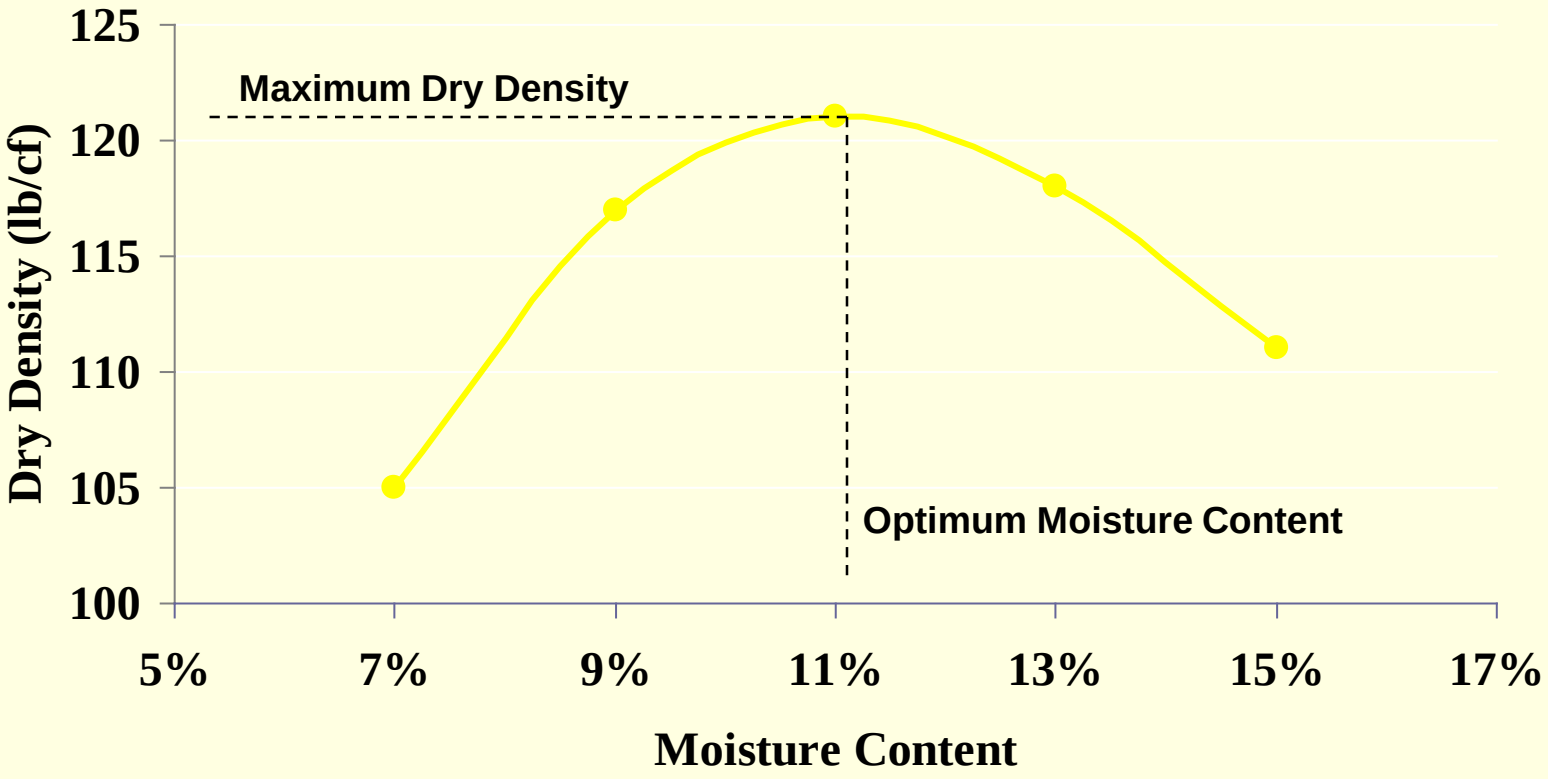

ASTM D558

Wet Mixing

Optimum Moisture Content

Initial Compaction

Grading

Final Compaction


SL0012

Curing

Basic Premise

- We are making a lean concrete out of the existing road base.
- By utilizing the existing material, we don’t significantly change the road elevation, allowing ditch line integrity to be maintained
- Although this material can NOT be used as a road surface, it allows a chip seal, slurry seal or other thin flexible pavement to last far beyond normal expectations


Surfacing
2001/10/ 2

Surfacing

FDR

Design Advantages
&
Engineering Properties

Increased Rigidity Spreads Loads

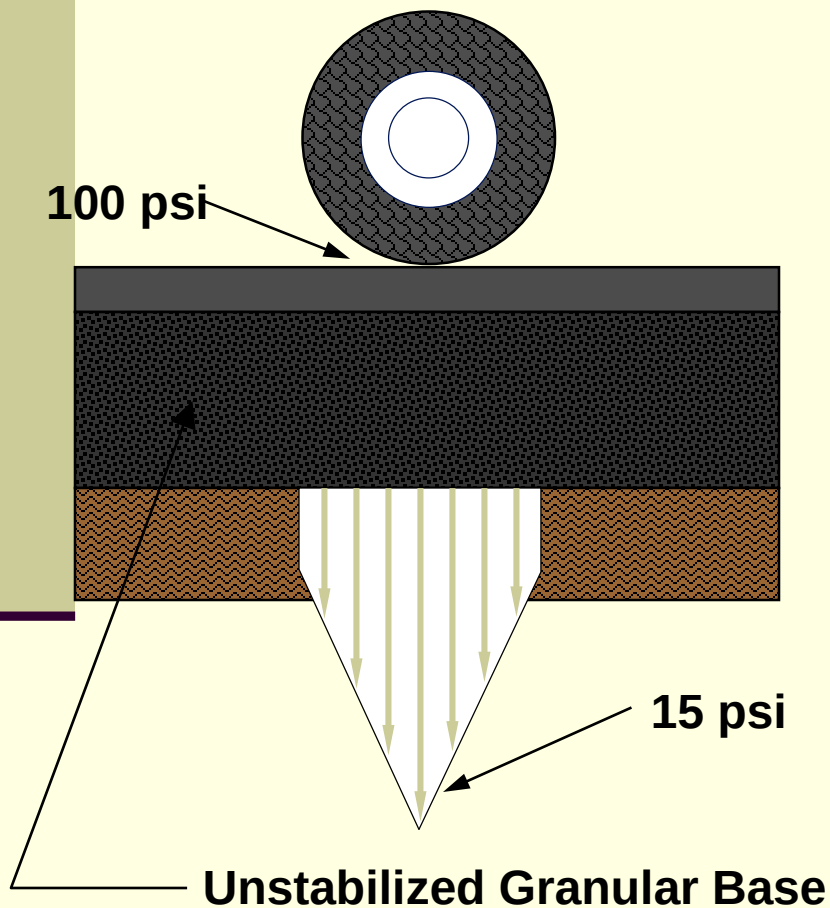

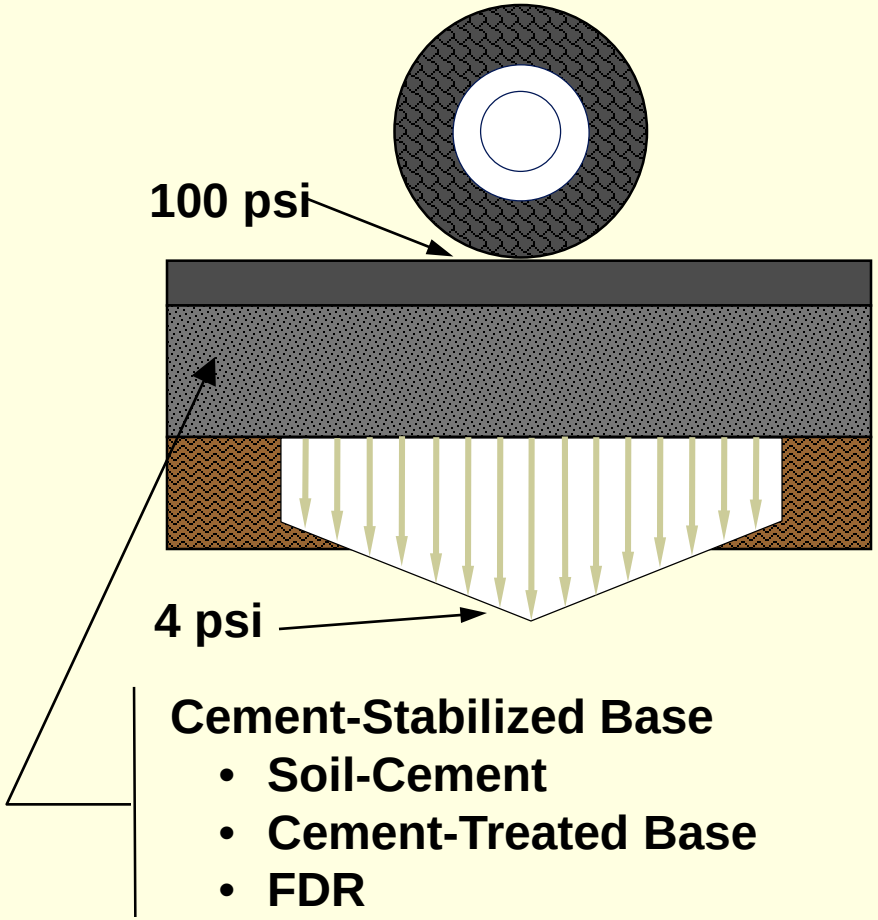

Eliminates Rutting Below Surface

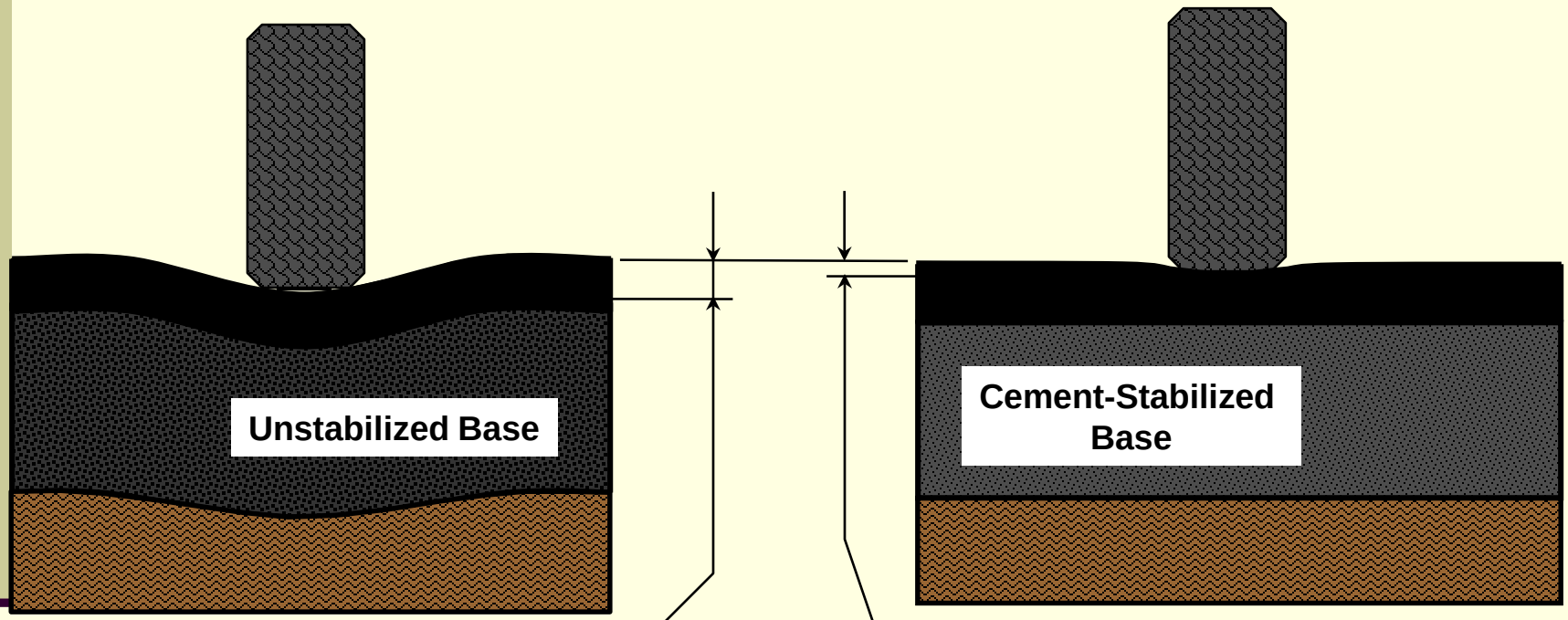

Rutting can occur in surface, base and subgrade of un-stabilized bases due to repeated wheel loading

Cement-stabilized bases resist consolidation and movement, thus virtually eliminating rutting in all layers but the asphalt surface.

Reduced Moisture Susceptibility

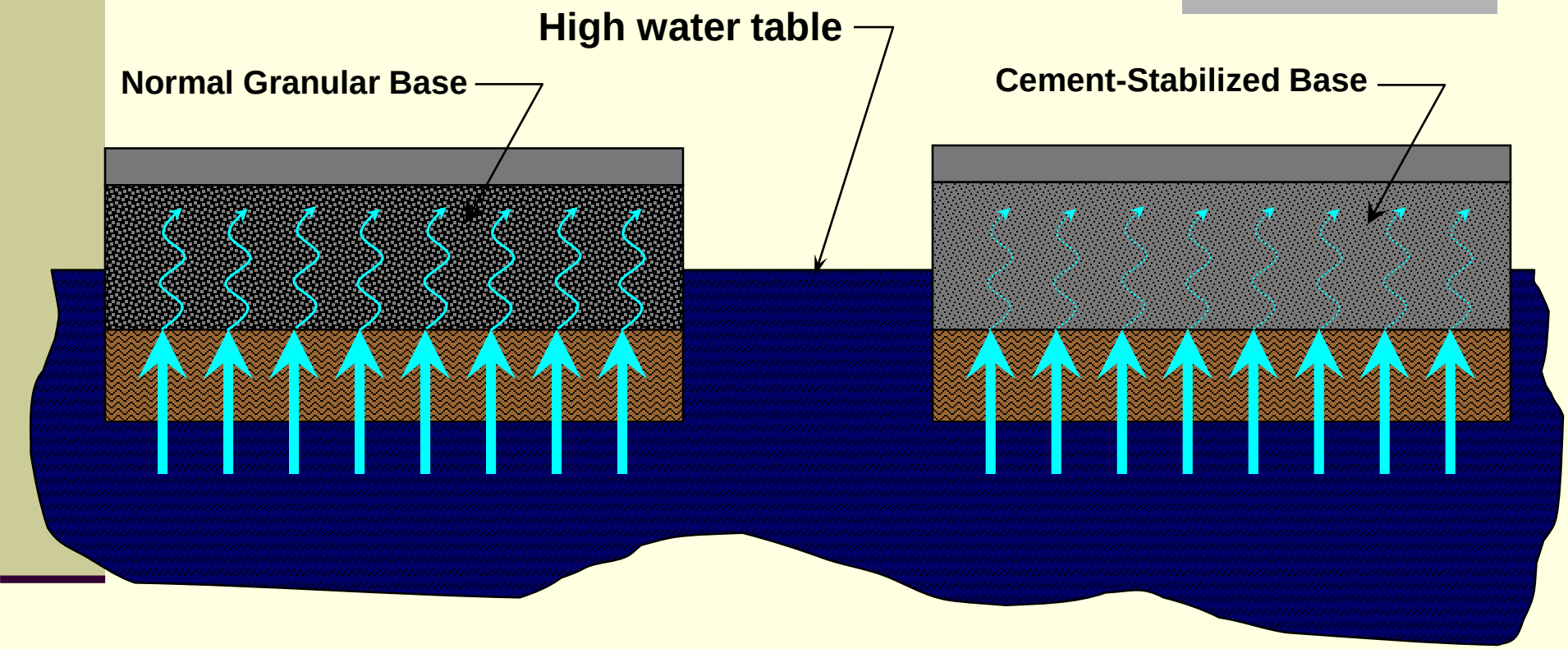

Moisture infiltrates base

- Through high water table
- Capillary action
- Causing softening, lower strength, and reduced modulus

Cement stabilization:

- Reduces permeability
- Helps keep moisture out
- Maintains high level of strength and stiffness even when saturated

Thinner Pavement Section

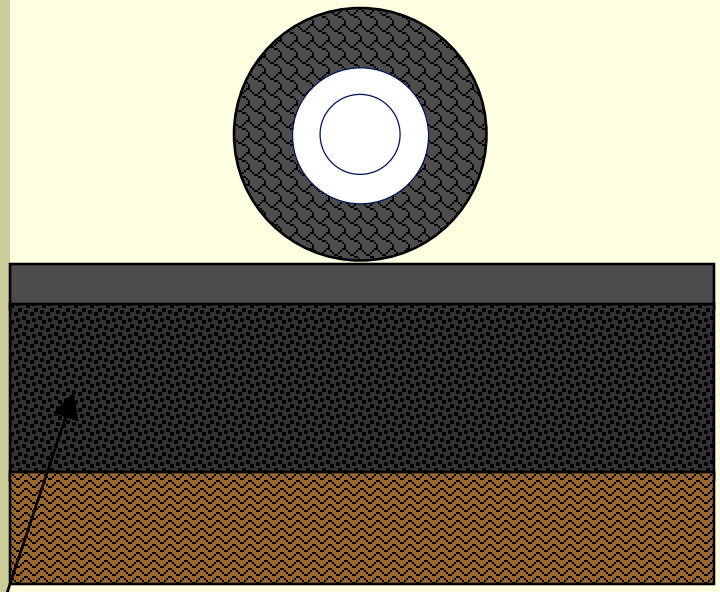

Un-stabilized Granular Base

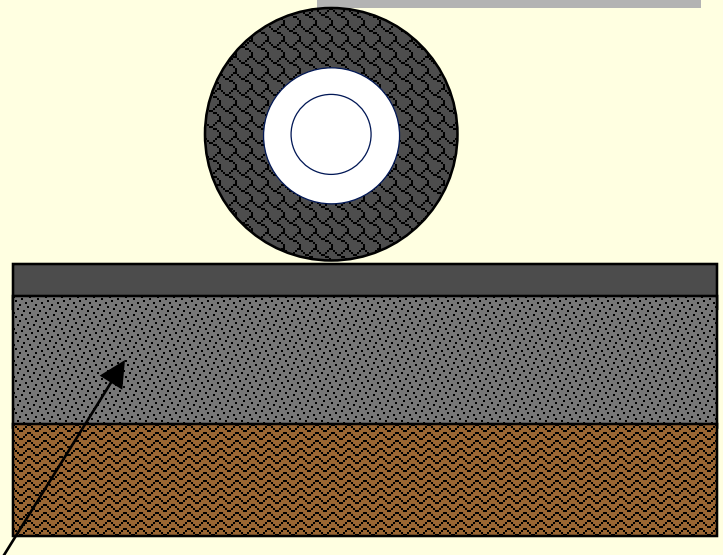

Cement-Stabilized Base

- Soil-Cement Base
- Cement-Treated Base
- Full-Depth Reclamation

Existing Thin Paved Structure

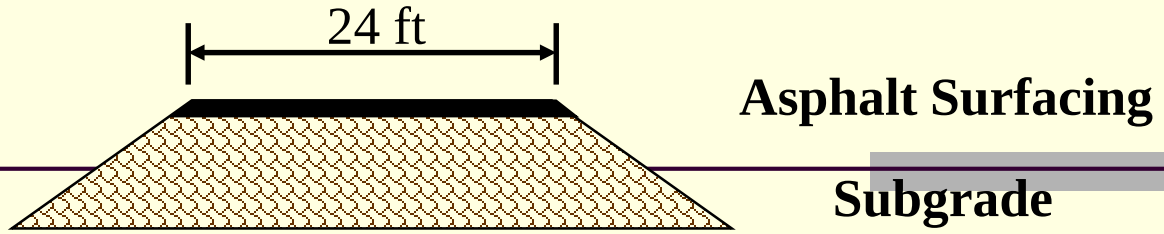

Conventional Build Up Granular Structure

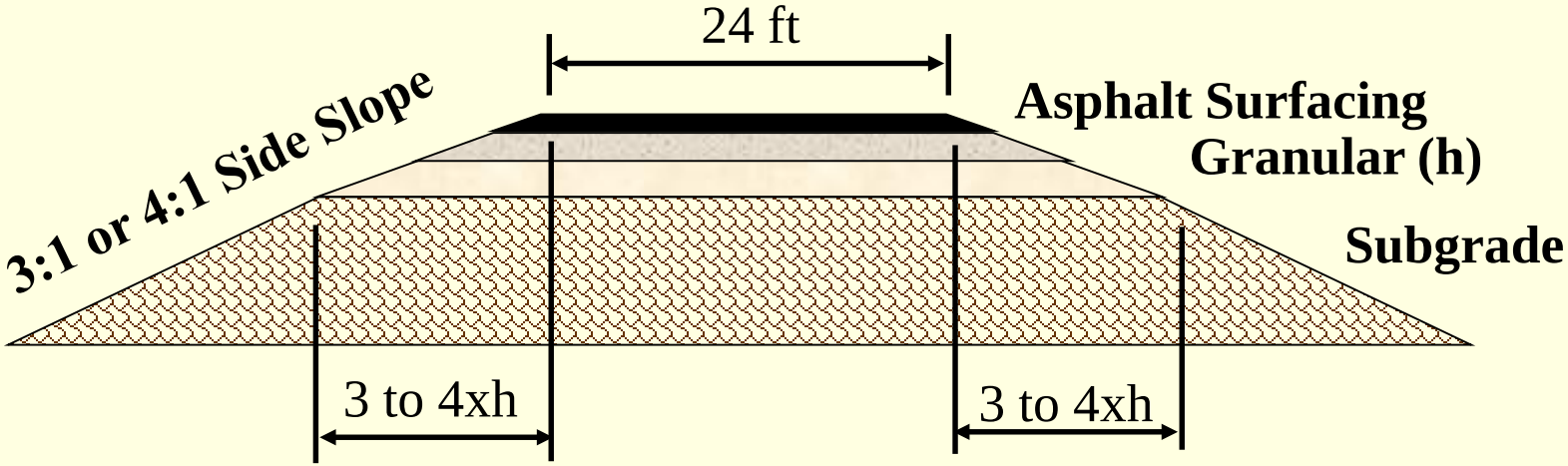

Full-Depth Recycled Structure

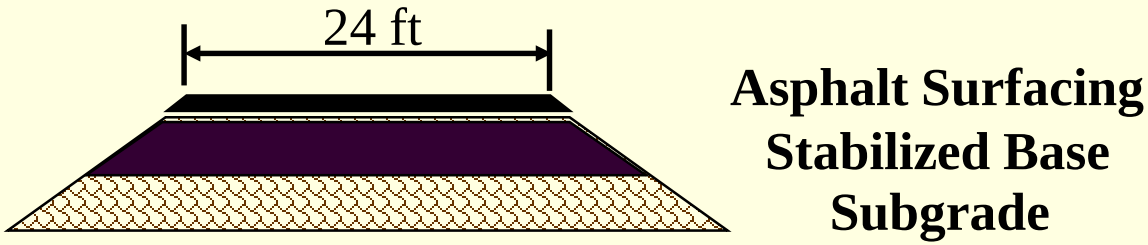

Widening

- Best Practice
- Mixing chamber assures blending of aggregate from the road base to the sub base material in the lane widened area.
- This thorough mixing is the most efficient way of creating a contiguous base that will perform.
- No more failure on the widened lane joint.

Widening Example

Mix Design

- Just as in Ready Mix Concrete or Roller Compacted Concrete, a material evaluation is necessary to determine properties of FDR
  - Cement Content – Spread Rate
  - Optimum Moisture Content
  - Density - Compaction
  - Target Strength

Trial Batches

- Typically any new project has trial batches made from the material
- Modified Procter is run to determine optimum moisture content & spread rate.
- The finer the material, the higher the “Spread Rate”

Moisture/Density Relationship

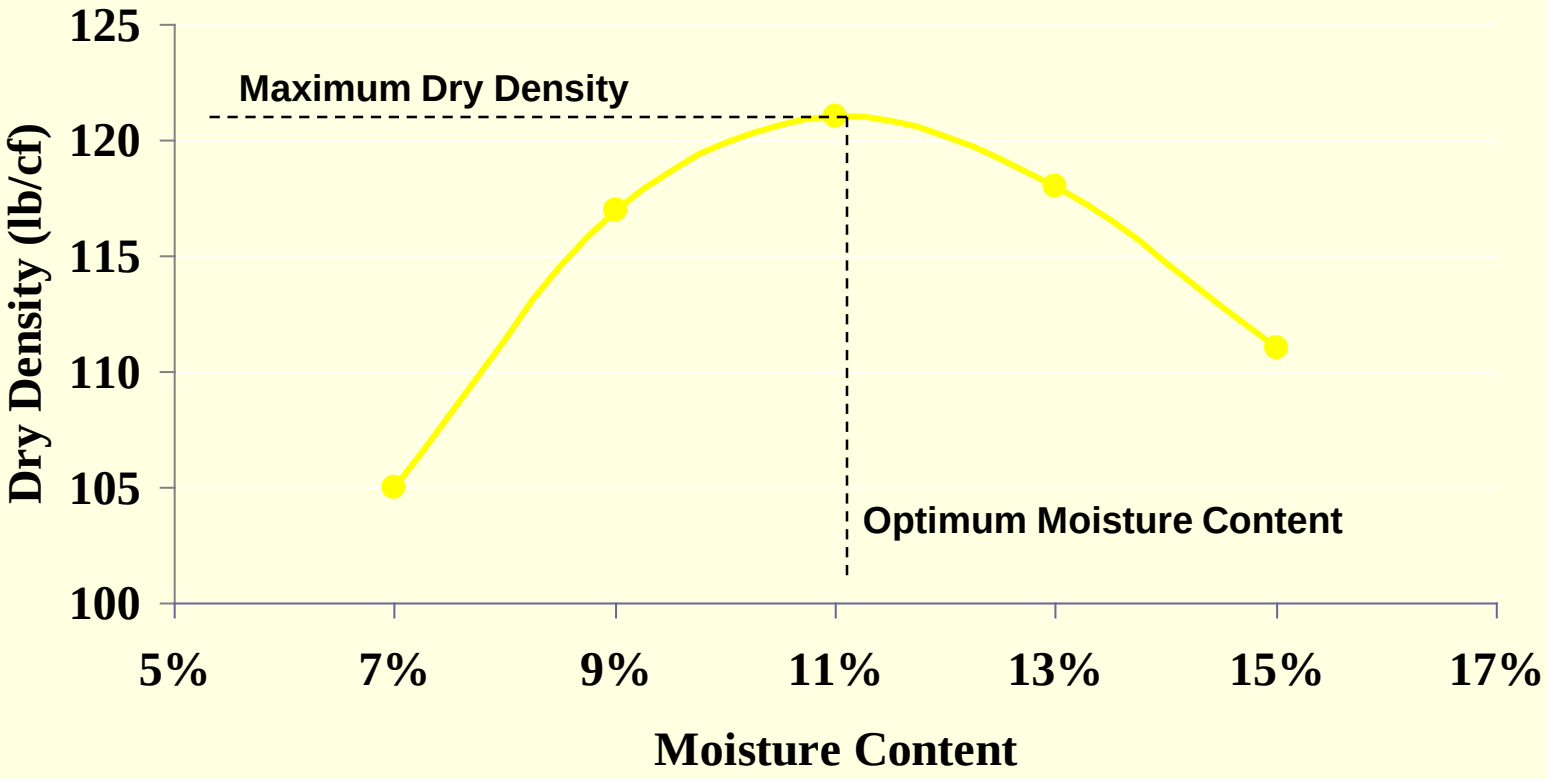

ASTM D558

Spread Rate & Strength

- In the FDR process your mix design sets a spread rate typically between 4 – 8% cement by weight.
- Then specimens are made with a modified proctor hammer to test in unconfined compression to confirm the needed strength of 2-500 psi @ 7 days.

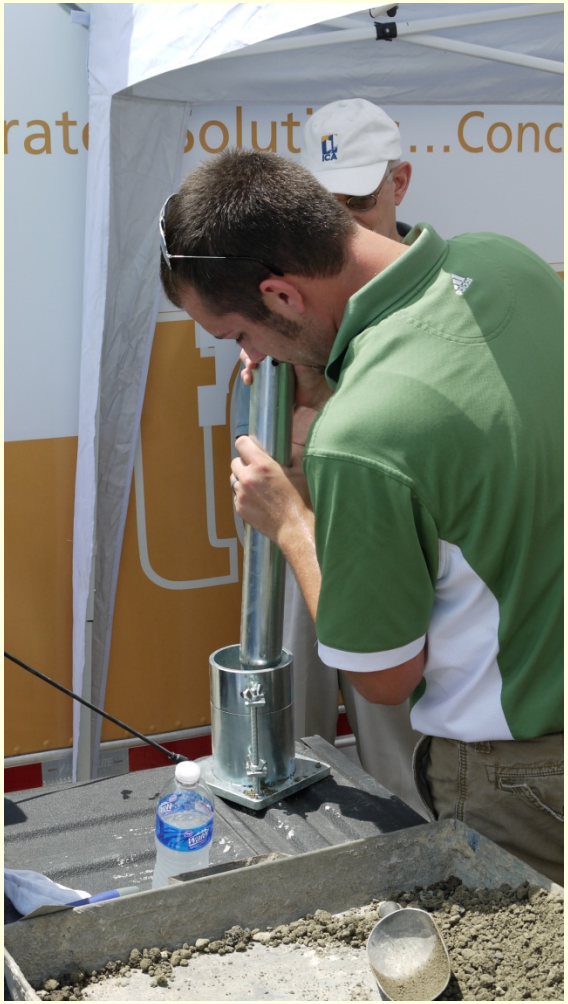

Field Testing - Moisture

Nuclear Gauge – Moisture & Density

FDR

Green Advantages

Environmental Advantages

- Use of in-place materials
- Little or no material hauled off and dumped
- Maintains or improves existing grade
- Conserves virgin material
- Saves cost by using in-place “investment”
- Saves energy by reducing mining and hauls

Reclamation-versus-New Base

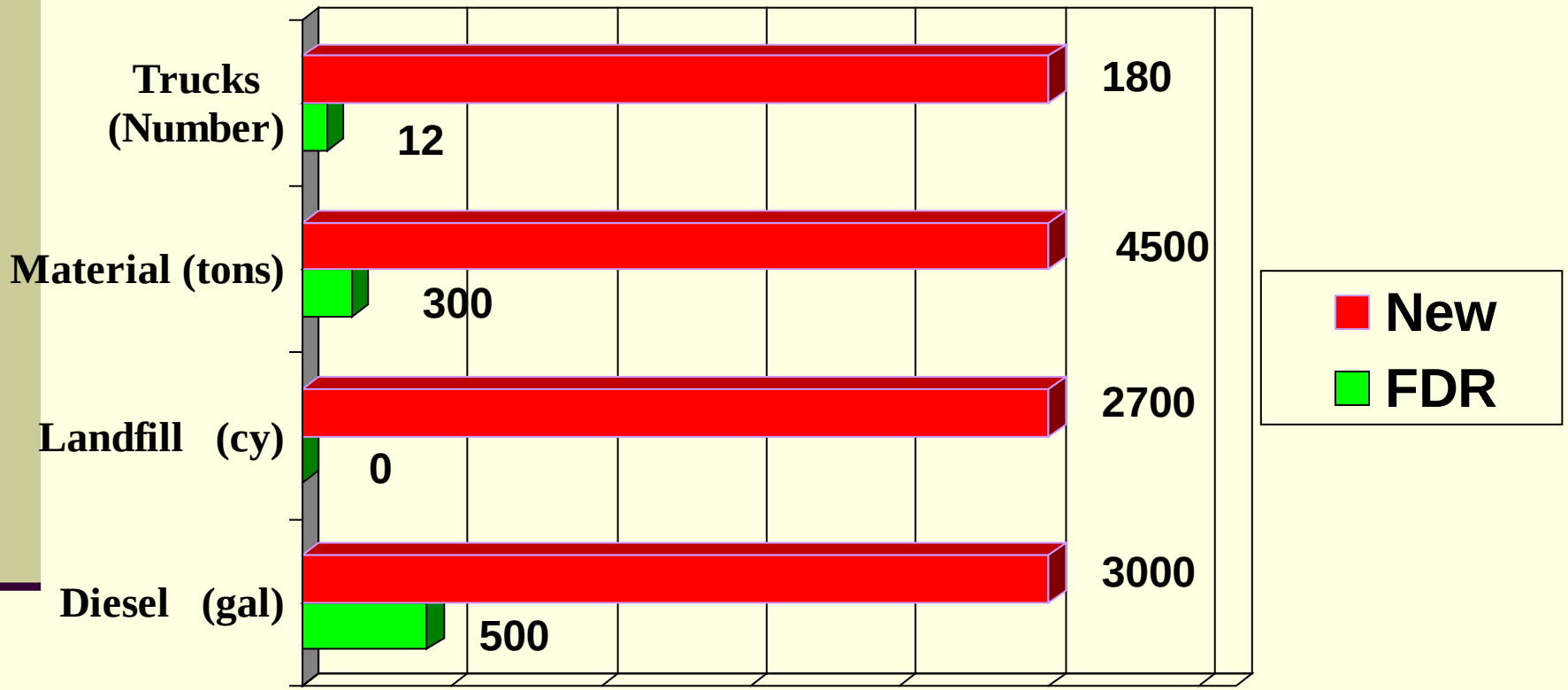

1 Mile of 24'-wide 2-lane road,
6" base + 2" asphalt surface

How can I use my own forces to rebuild roads with FDR with Cement???

RM FDR

Ready Mixed Full Depth Reclamation

The County Model

Ready Mixed FDR

- Either slurry or grout may be used in place of dry cement
  - Slurry is cementious material mixed with water.
  - Grout is cementious material, sand &/or gravel mixed with water. The aggregate facilitates loading & unloading of the cementious material
- Both have worked
- Allow for dust free application of cement

RM FDR - County Model

- RM company sells the slurry or grout
- A contractor or equipment dealer rents the “Grinder” with an operator to the county or municipality
- The county or municipality then uses their own forces to perform most of the operations
- They already own Rollers, Graders, a water truck.
- Then a chip seal or HMA is applied as a surface.

Indiana Success Story

- The success and durability of conventional FDR in the windmill areas of the state showed counties that there was an alternative to the constant cycle of repairing roads that were built “farm to market” with no real solid base.
- Nine counties have done small FDR jobs utilizing Ready Mix grout or slurry investigating the process.

Actual Case Studies

Rural

Cass County Indiana RM FDR

- Initial plan was to overlay an existing road with 7” of asphalt.
- Working with IRMCA they came up with a value engineering proposal to FDR the existing chip sealed road with 10” deep FDR and then put 1 ½ inches of asphalt surface.
- Cass County had their own Mixer.

Roadway was mixed

Windrowed with a grader

Slurry addition

Remixed & Regraded

Paved and striped

Tipton County, Indiana RM FDR

- After 2 years of extremely harsh winters, Tipton County had severe deterioration of their road system.
- Tipton County and their consulting engineer saw the success of other counties using their own forces to rebuild the road base.
- They made a decision to rent a Bomag mixer and pad foot roller and do RM FDR with their own forces.

Roadway was premixed to 6” depth

Water Addition

Windrowed with a grader

Slurry addition

Remixed & Compacted

Finish Rolled

Finished Chip Seal Road

Tipton County Results

- 19 miles of RM FDR with a partner customer
- Over 5000 tons of cementious material
- Average cost estimate
  - Cement Stabilization - $80,000 per mile
  - Aggregate stabilization - $80,000 per mile
- Life cycle advantage
  - Cement Stabilization – 10-15 years
  - Aggregate stabilization – 5 years

Actual Case Studies

Urban

INDOT I-69 Emergency Rebuild

- INDOT found that there was a base failure in a 2 mile stretch of I-69 northeast of Indianapolis Indiana.
- They let an emergency contract to excavate the roadway & replace, using stabilization to correct the subgrade failure.
- Spreading the dry powder (LKD) caused issues with rebuilding under traffic.
- They switched to RM FDR & the job was completed ahead of schedule.

I-69 Rebuild North of Indianapolis

Emergency rebuild placed under traffic

Kennedy Connector – Cincinnati OH

- Job specified dry LKD stabilization
- Dust from the process and complaints from nearby residents caused the contractor to rethink the process.
- Local RM producer was called in & produced a thick grout mixture that was spread over the area @ a specified rate per foot.
- Mixed to a depth of 12”, this material provided a new base that will last a long time.

Grout delivery evenly distributed

Thorough mixing to 12 inches

Consolidation with a sheep’s foot

Finish grading & final consolidation

Ready to repave

INDOT Hyperfix I-65 & I-70

- INDOT let an emergency contract to lower the roadway 2 feet in Indianapolis Indiana.
- Due to the success of cement stabilization on the I-69 job and the inner city location, slurry application was specified.
- The application resulted in zero subgrade failures & the job was completed 2 weeks ahead of schedule.

Inner City Application

- No dust, yet controlled application of cement slurry

Process in action

Finished Subgrade ready to repave!

FDR Summary

- FDR is fast, economical and a superior road rehabilitation process.
- Absolute best practice for widening applications
- Can be overlaid with HMA, Chip Seal, or other surface. No aggregate base needed.
- Gives the county/municipality a high quality pavement at a fraction of the cost of typical reconstruction.

Did We Accomplish Today's Goals?

- Introduce a different method of Recycling Roadways to a new audience.
- Explain the FDR process so that everyone understands the mechanism of how it works.
- Show that it is economical, sustainable & viable for our local roads.

Turn Your…

into

a

Full Depth Reclamation with Cement

Any Questions?

Design Procedures for Soil Modification or Stabilization

Production Division
Office of Geotechnical Engineering
120 South Shortridge Road
Indianapolis, Indiana 46219

January 2008

3.03 Strength requirements for stabilization and modification

The reaction of a soil with quick lime, or cement is important for stabilization or modification and design methodology. The methodology shall be based on an increase in the unconfined compression strength test data. To determine the reactivity of the soils for lime stabilization, a pair of specimens measuring 2 in. (50 mm) diameter by 4 in. (100 mm) height (prepared by mixing at least 5% quick lime by dry weight of the natural soil) are prepared at the optimum moisture content and maximum dry density (AASHTO T 99). Cure the specimens for 48 hours at 120° F (50° C) in the laboratory and test as per AASHTO T 208. The strength gain of lime-soil mixture must be at least **50 psi** (350 kPa) greater than the natural soils. A strength gain of **100 psi** (700 kPa) for a soil-cement mixture over the natural soil shall be considered adequate for cement stabilization with 4% cement by dry weight of the soils and tested as described above

In the case of soil modification, enhanced subgrade support is not accounted for in pavement design. However, an approved chemical (LKD, cement, and fly ash class C) or a combination of the chemicals shall attain an increase in strength of **30 psi** over the natural soils when specimens are prepared and tested in the same manner as stabilization.

4.04 Combination of Cement Fly Ash and Lime Mixture

To enhance the effectiveness of lime, cement or fly ash modification or stabilization combinations, the subsequent guidelines shall be used. An increase of **50 to 100 psi** over the natural soil is required for the stabilization and an increase of **30 psi** over the natural soils is required for modification.

1. Lime and Fly ash: The ratio between lime and fly ash mixture should be in the range of 1:1 to 1:9 respectively.

2. Cement and Fly ash: The ratio of cement and fly ash should be in the range of 1:3 to 1:4 respectively.

3. Lime, cement, and fly ash ratio should be 1:2:4 respectively.